```
**************************************************************

*     Infineon   Technologies    AG

*     GUMMEL-POON     MODEL IN    SPICE 2G6   SYNTAX

*     VALID UP    TO    10    GHZ
*     >>>   BFP640ESD  <<<
*     (C)   2012  Infineon   Technologies    AG

*     Version 3.0     November   2012

**************************************************************
* - Please use the global SPICE GP parameter TEMP to specify the
*     junction temperature of the device in your application to get
*     correct simulation results. This procedure is necessary because
*     the GP model does not consider the self heating of the device.
* - TEMP is calculated by TEMP=TA+Pdc*(RthJS+RthSA). The junction
*   temperature TEMP is the sum of the ambient temperature TA and
*   the increment of temperature caused by the dissipated DC power
Pdc.
* - RthJS is the thermal resistance between the junction and the
*   soldering point. RthJS for this device is 310 K/W. RthSA is the
*   thermal resistance of the PCB, from the soldering point to the
*   ambient. For determination of RthSA please refer to Infineon's
*   Application Note "Thermal Resistance Calculation" AN077.
* - The model has been verified in the junction temperature range
*   -25°C to +125°C.
* - TNOM=25 °C is the nominal ambient temperature during measurement
*   for the parameter extraction. Please do not change this value.
**************************************************************
```

Import of SPICE-Model in MWO (Microwave Office from AWR)

Following steps are required in order to import a SPICE-netlist with the corresponding symbol view for the transistor:

- Open the working project where you want to embed the transistor in your main schematic
- Import the netlist (e.g.: BFP840ESD_SPICE_v2.txt) by right mouse click on **Circuit Schematics**, then select **Import Netlist** and go to the folder where the netlist (e.g.: BFP840ESD_spice_v2.txt) was stored and select the file.

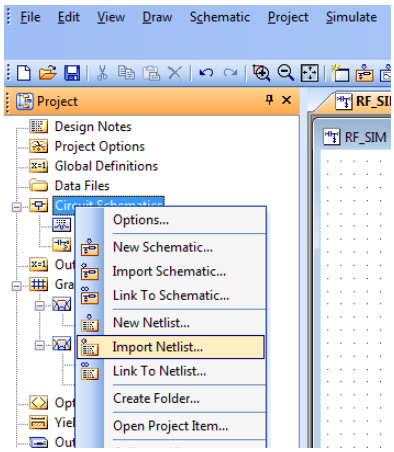

- A new window is popped up. Choose the **Pspice** netlist format and click ok.
- MWO will ask you whether the first 2 ports should be swapped → Click **yes**

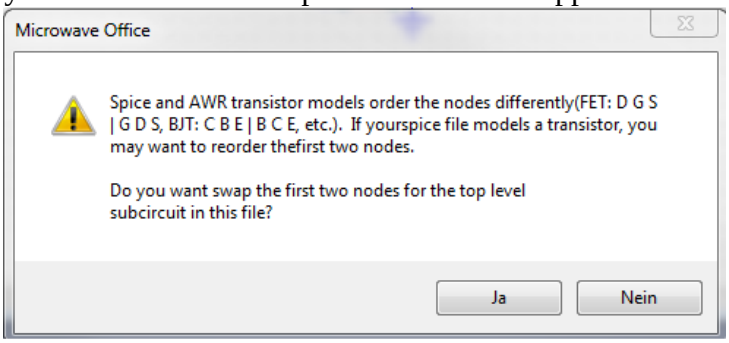

The netlist is now accessible within the elements in “Subcircuits”. Simply drag and place the model “BFP840FESD” with the mouse to your main schematic.

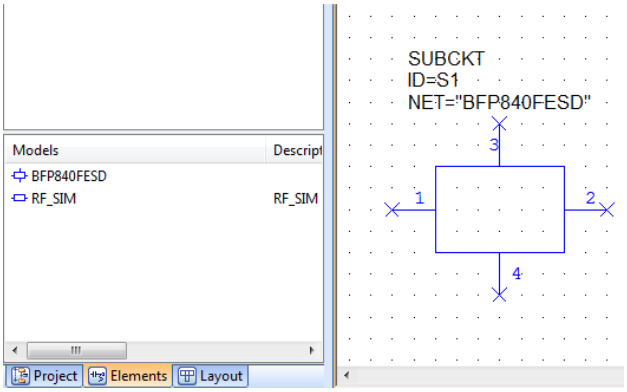

The netlist is still represented by the unwanted default 4-port box representation.

- Import the appropriate symbol for this device which has two emitter pads (choose delivered file “Symbol MWO for Infineon_BJT_BFP640ESD.syf”) (**Project → Circuit Symbols → Import Symbols**)

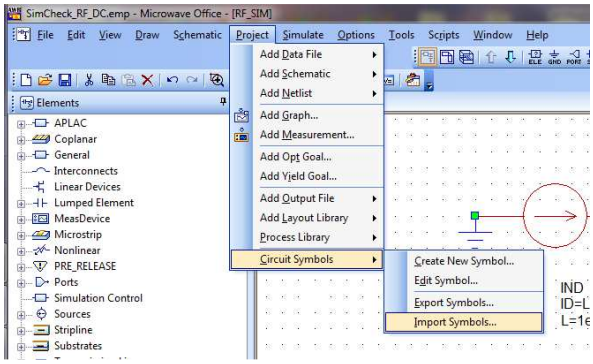

- The correct symbol must now be linked to the transistor subcircuit. This is achieved by right click on BFP842ESD box and select “properties”. New window is popped up. Now link the symbol BJT_2E to the subcircuit of the transistor.

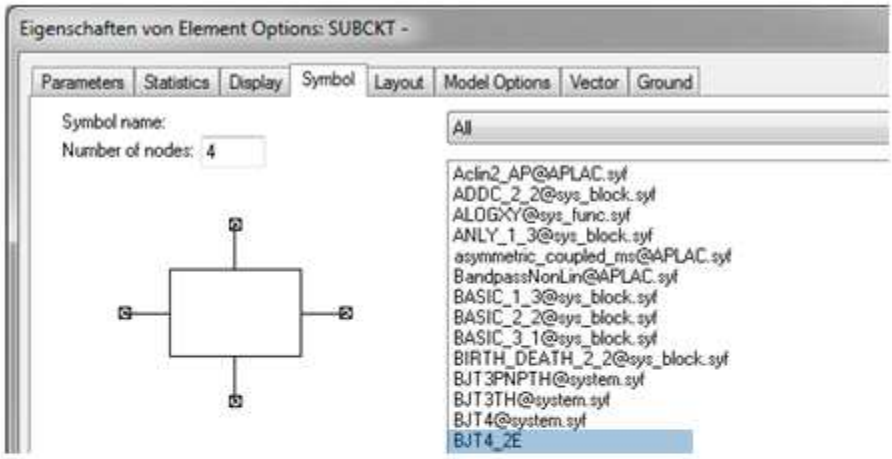

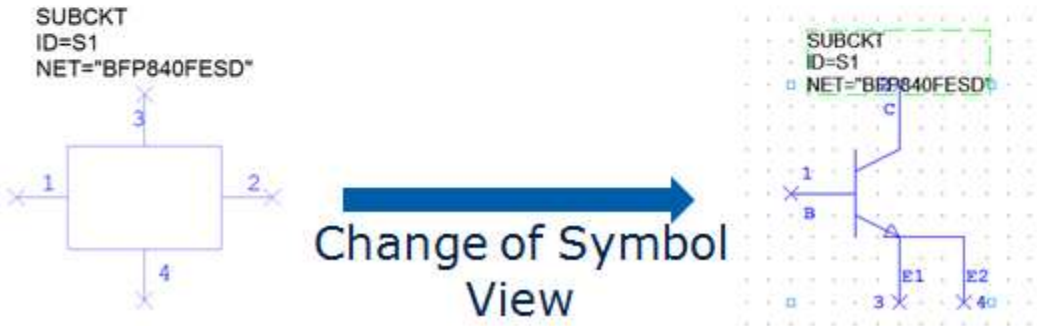

Import SPICE-Model in ADS version 2009 (Advanced Design System from Agilent)

To import the SPICE-Model in ADS 2009 the following procedure is to be done:
Store the ADS-file. In a Schematic Window of ADS go to ->File -> Copy Design… Then set the path of the folder where the ADS-file ("*device_name.dsn*") of the device has been stored and select the file. Set also the path of your current project. Then click OK.

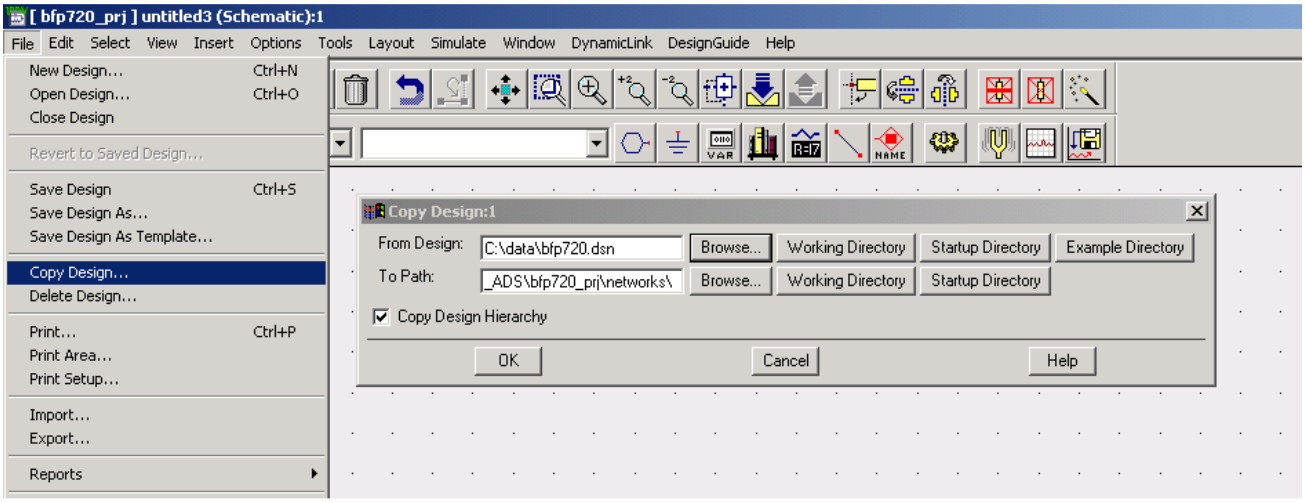

Import SPICE-Model in ADS version 2011 (Advanced Design System from Agilent)

To import the SPICE-Model in ADS version 2011 the following procedure is to be done:
Copy the extracted ADS folder (e.g.: "BFP840ESD") to your actual workspace "*workspacename*_ wrk" under the subfolder "*workspacename*_lib". After that you can place the model into your design for simulation.